DB2 Analytics Accelerator on Cloud: High-Speed Analysis of Enterprise Data with Cloud Flexibility (Session #1294)

Daniel Martin
danmartin@de.ibm.com

October 2016

World of Watson 2016

IBM

Please note

IBM's statements regarding its plans, directions, and intent are subject to change or withdrawal without notice and at IBM's sole discretion.

Information regarding potential future products is intended to outline our general product direction and it should not be relied on in making a purchasing decision.

The information mentioned regarding potential future products is not a commitment, promise, or legal obligation to deliver any material, code or functionality. Information about potential future products may not be incorporated into any contract.

The development, release, and timing of any future features or functionality described for our products remains at our sole discretion.

Performance is based on measurements and projections using standard IBM benchmarks in a controlled environment. The actual throughput or performance that any user will experience will vary depending upon many factors, including considerations such as the amount of multiprogramming in the user's job stream, the I/O configuration, the storage configuration, and the workload processed. Therefore, no assurance can be given that an individual user will achieve results similar to those stated here.

Open z data to Analytics in the cloud, without compromising z system security and reliability.

The Accelerator enters the cloud era. Starting with v6, we offer an **additional deployment option** for cloud.

Deployment Option 1

IBM DB2 Analytics Accelerator for z/OS

A workload optimized, appliance add-on to DB2 for z/OS that enables the integration of analytic insights into operational processes to drive business critical analytics & exceptional business value.

- On premises offering
- Based on Netezza technology

Deployment Option 2

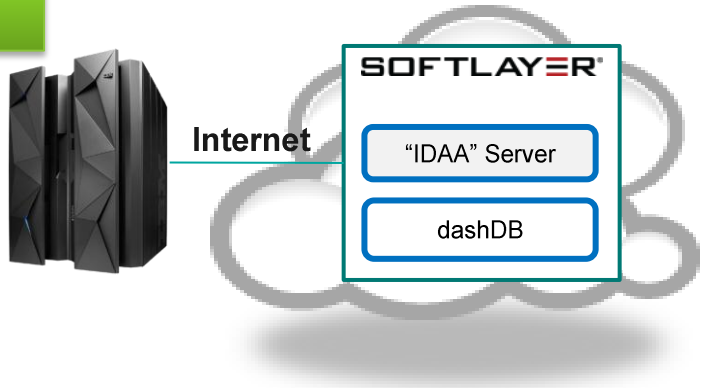

IBM DB2 Analytics Accelerator for z/OS on Cloud

Transition of DB2 for z/OS into a hybrid cloud solution, starting with query acceleration use case.

- Hybrid cloud offering
- Based on dashDB

IBM DB2 Analytics Accelerator v6.1 introduces a new product structure

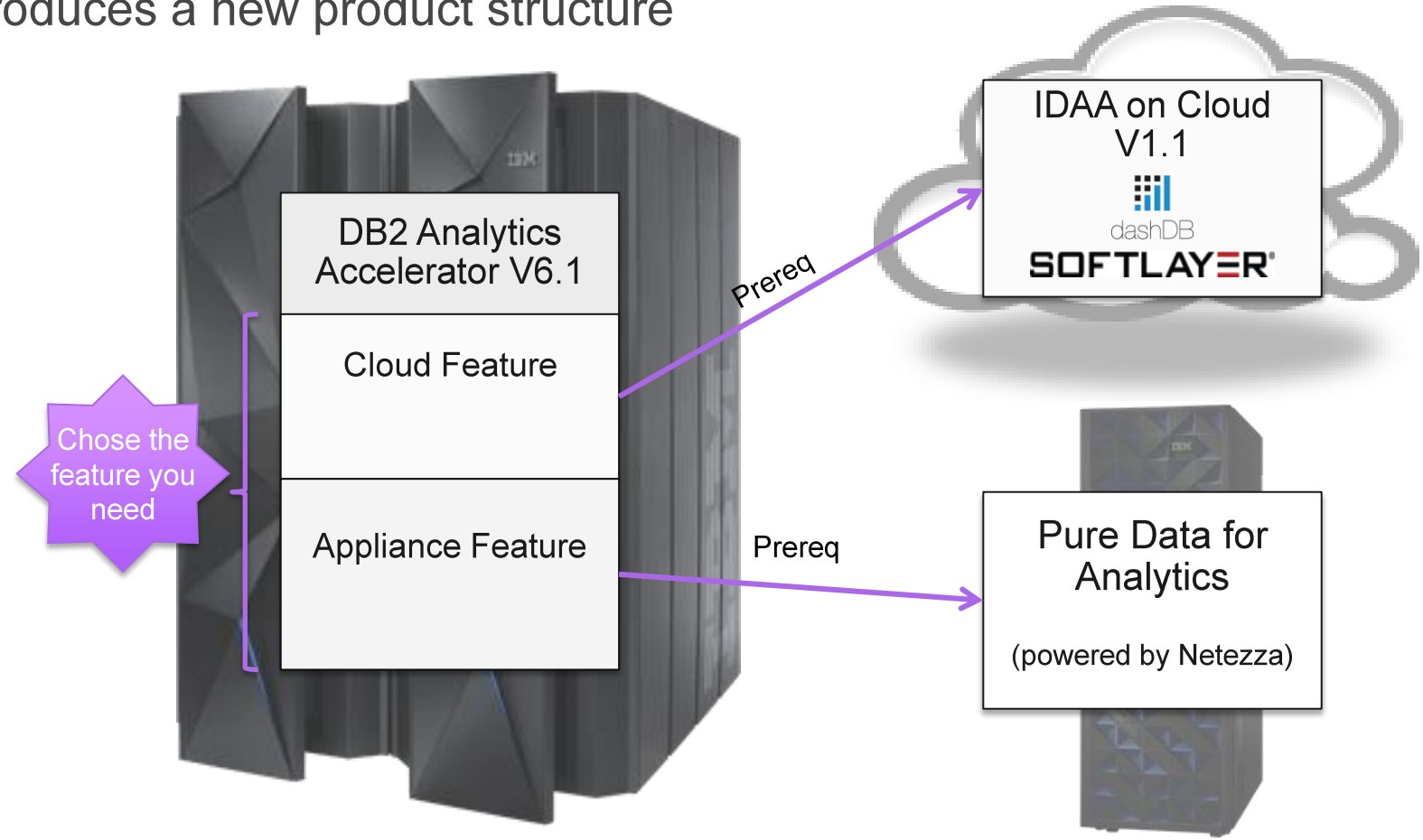

Benefits of the Analytics Accelerator Hybrid Cloud Option

- Hybrid cloud
  - Uniform experience wheter IDAA runs on-premise or in the cloud
  - Can easily switch between both deployments
  - Can chose to run on both deployments, even using the same DB2 subsystem
- New pricing model: monthly charge
- Hardware provisioning, operations and management by IBM
- Fast provisioning: ready within a day or two
- Powered by dashDB

Cloud IDAA is the basis for a number of innovations on our roadmap

Software-defined environment (SDE). IDAA as a software-only deliverable. Can be deployed on your virtualized environment (Intel or zLinux). Complements the appliance and Cloud platform choice.

Unified store. DB2/z as true HTAP DBMS. Even though queries are offloaded to IDAA, they always run on current data (no latency).

Open IDAA. Make z data simple. Access z data directly on cloud without going through DB2 for z/OS, but still under z security and control.

IDAA on Cloud Architecture and Solution Details

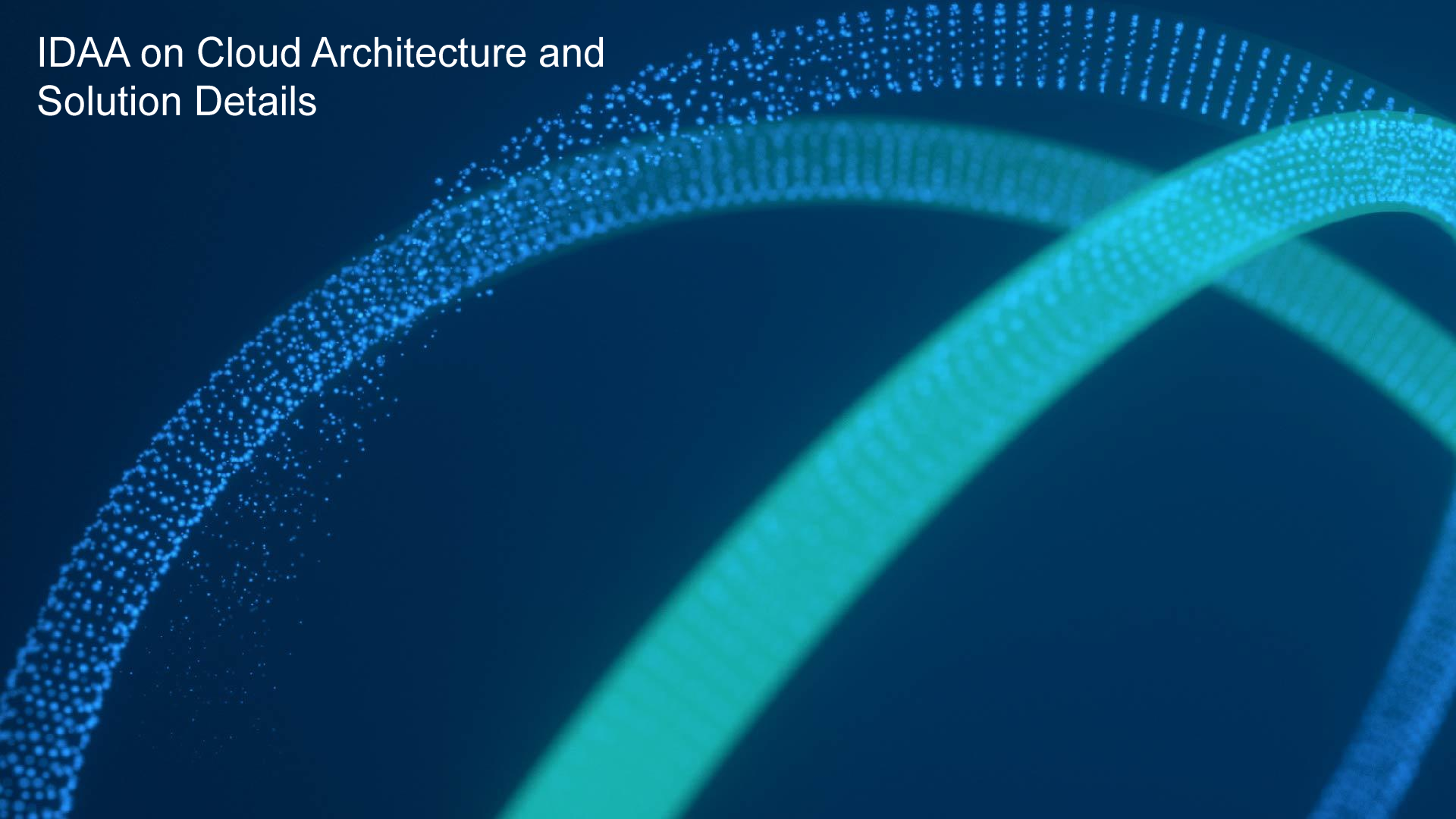

IDAA on Cloud Architecture is based on dashDB container technology

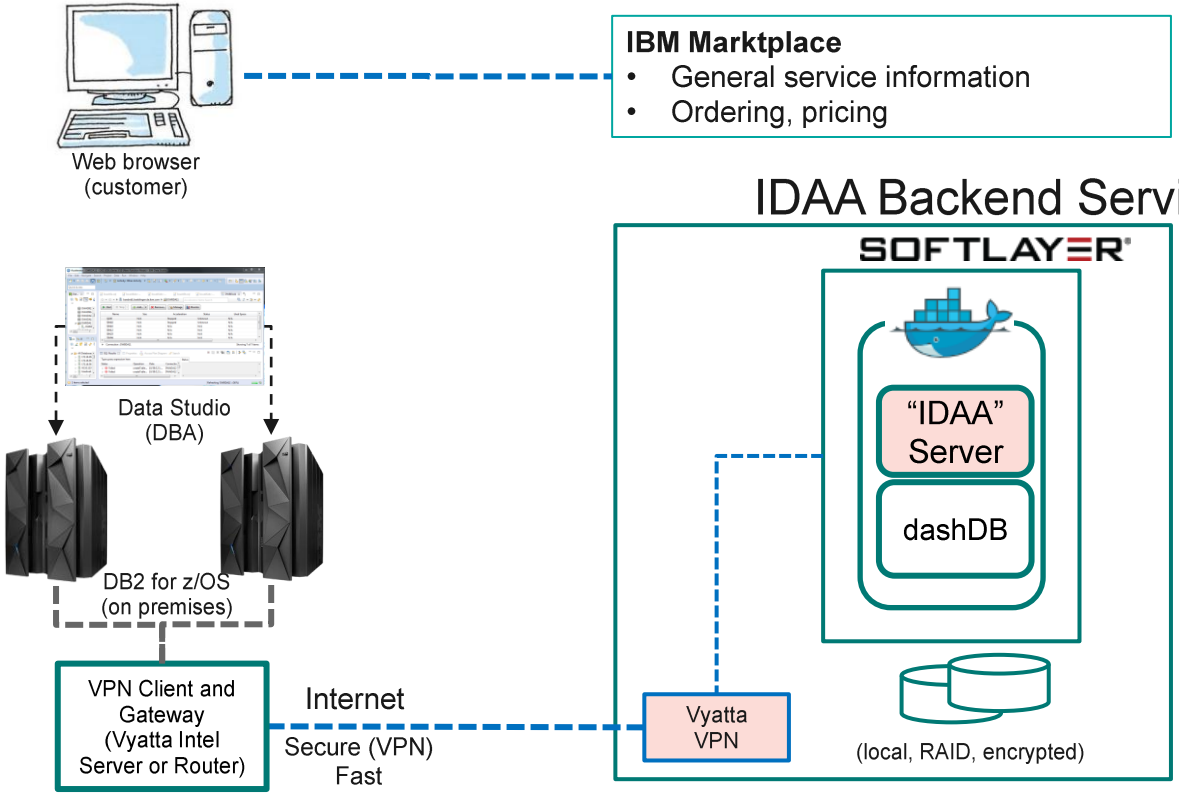

- One physical server running in Softlayer
- Leverage architecture for future on-prem offering

dashDB is the new acceleration engine for IDAA

- IBM's common analytics engine
- Using latest technology innovations from IBM

Next Generation In-Memory

In-memory columnar processing with dynamic movement of data from storage

CPU Acceleration

Multi-core and SIMD parallelism (Single Instruction Multiple Data)

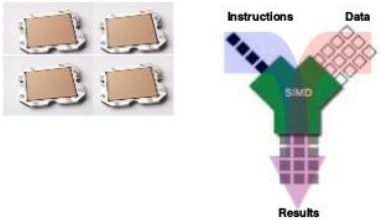

Analyze Compressed Data

Patented compression technique that preserves order so data can be used without decompressing

Encoded

Data Skipping

Skips unnecessary processing of irrelevant data

We start with the basic IDAA feature set for Cloud, expanding quickly

- For the initial release, we focus on bread-and-butter functionality for IDAA
  - Add table, load, offload query
  - Monitoring (IDAA Studio and OMPE)

- Co-existence: v5 and v6 accelerator on the same DB2 subsystem
- Workload balancing between v6 systems
- Simplified accelerator update: one single package (container) for the accelerator, not 5 packages
- Improved SQL compatibility with DB2 for z/OS

IDAA on Cloud will continuously release and increase the set of features and functionality

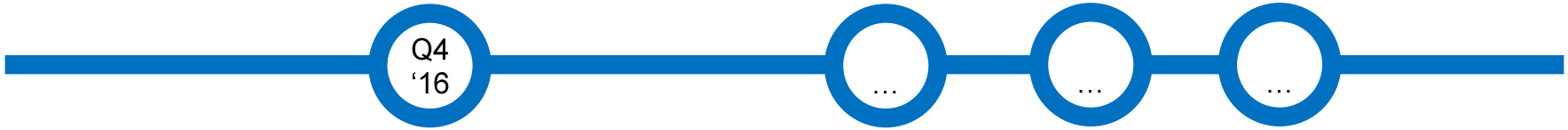

IDAA on Cloud GA
- Powered by dashDB
- Hosted on SoftLayer

Continuous Delivery
- Extend functional compatibility to IDAA-on-PDA
- Add addional functions based on feedback
- Targetting ~monthly releases

IDAA on Cloud improves SQL compatibility over the previous version

- Native support for EBCDIC MBCS, GRAPHIC (converted to UTF-8 in v5)
- Native support for “FOR BIT DATA" subtype
- Native support for TIMESTAMP value 24:00:00 (mapped to 23:59:59 in v5)
- Native support for TIMESTAMP precision 12 (truncated to precision 6 in v5)
- Offloading all types of correlated subqueries (only small subset was offloaded in v5), including table expressions with sideway references
- Improved offload for scalar functions (not offloaded in v5 when using specifiy datatypes)
  - MIN/MAX, DAY, LAST_DAY, BIT*, TIMESTAMP_ISO, VARIANCE/STDDEV/… with UNIQUE clause
- Improved support for mixed encodings
  - Can add EBCDIC tables when UNICODE tables already present

IDAA on Cloud Query Performance compared to the previous generation

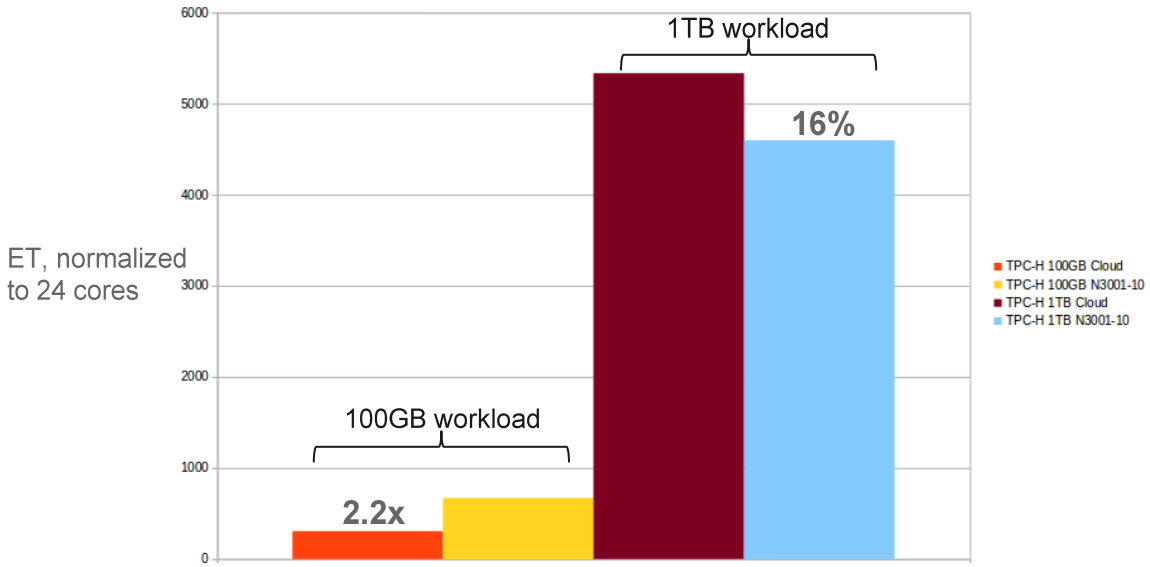

* Sum of 22 TPCH benchmark queries and 5 count(*) queries
** Normalized by #cores (Cloud: 24 cores, N3001-10: 140 cores)
*** Cloud network impact *increases with size of result*. 4.9x / 27% better than N3001-10 when running locally attached

- If workload *fits into memory*, we see a **2.2x improvement compared to an IDAA v5 system** (normalized by #cores)
- If data cannot be kept in memory, we see a 14% increase over IDAA v5 (normalized by #cores)
- Note: system memory is 256GB. Likely to run in memory when user data <= 2.4 * RAM
  - Can run in-memory for up to 614GB of raw data

Hardware specification of Cloud IDAA

- CPU: 2 x 12 cores, Intel Xeon E5-2690 v3 (Haswell) @ 2.6 Ghz
- Memory: 256GB
- Disk
  - 10x 800GB SSD, RAID-10 (mirrored + striped), for data
  - 2x 1TB HDD, RAID-1 (1 spare), for OS
- Network
  - 2x 10GbE adapters
- Redundant Power Supply

Intel Xeon E5-2690 v3

Dual Intel Xeon E5-2690 v3 (24 Cores, 2.60 GHz)

64GB RAM (512GB maximum)

Up to 12 Internal Hard Drives

Up to 10Gbps maximum Port Speeds

Redundant Power Supplies

Good for ~4 TB of user data

*assuming 4x compression

All data on cloud is **always fully encrypted**, when in motion and at rest

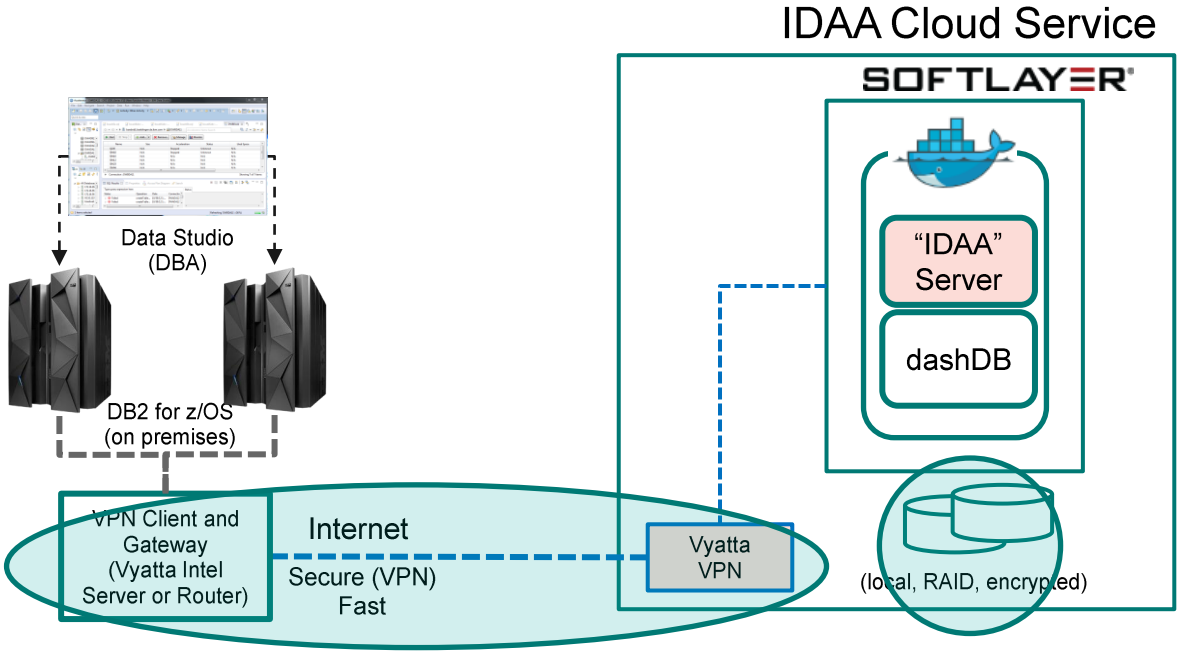

VPN Connection Options for IDAA on Cloud

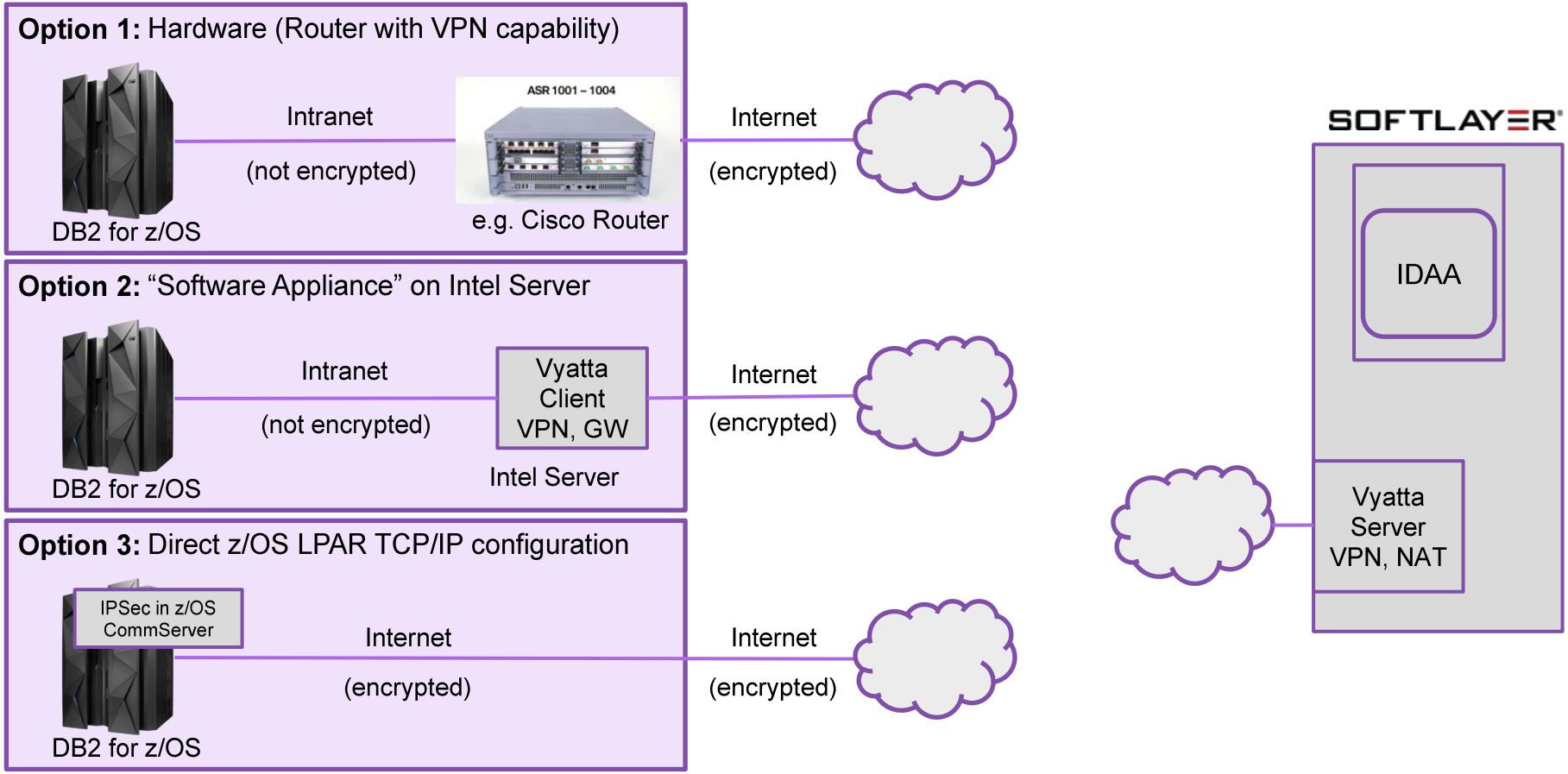

Installation and Upgrade of Cloud IDAA

- On-prem: no change
  - Activate DB2 for z/OS Accelerator feature
  - Install Accelerator Stored Procedures
- In addition
  - Configure VPN

DB2 for z/OS Accelerator

IDAA Stored Procedures

IDAA Studio

- Cloud
  - Initial setup done by IBM
  - Then managed by customer
    - IDAA is a docker image
    - Upgrade is a simple sequence of commants: stop, remove, start

IDAA container

IDAA on Cloud components and maintenance responsibilities

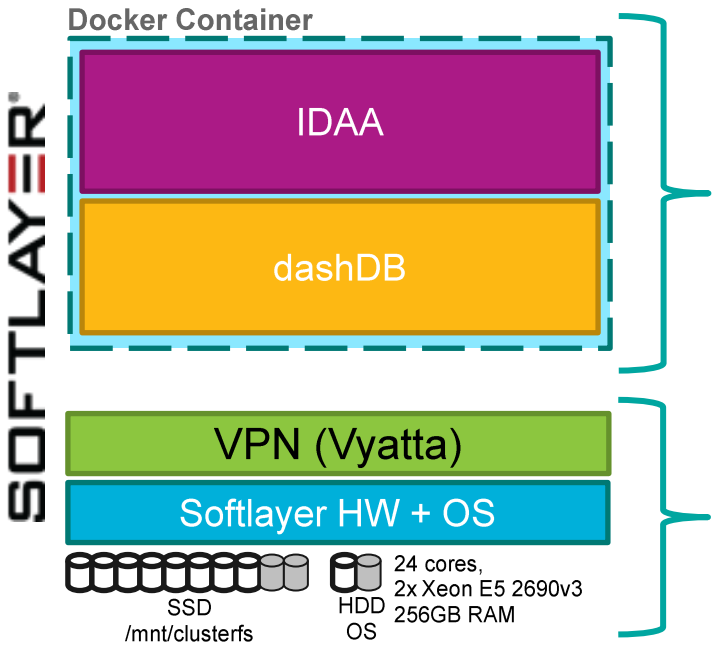

Customer responsibility

- Problem reporting via PMR
- Installation of OS patches
- **Updates** of IDAA software (docker container)

IBM's responsibility

- Provision, install, run and maintain hardware
- Provision, install, run and maintain VPN endpoint
- **Initial** installation of IDAA software

IDAA can be ordered from the IBM Marketplace

- Questions you are being asked during the order process
  - A technical contact for the VPN setup
  - The IBM datacenter location where the service should be deployed

Where can Cloud IDAA be deployed?

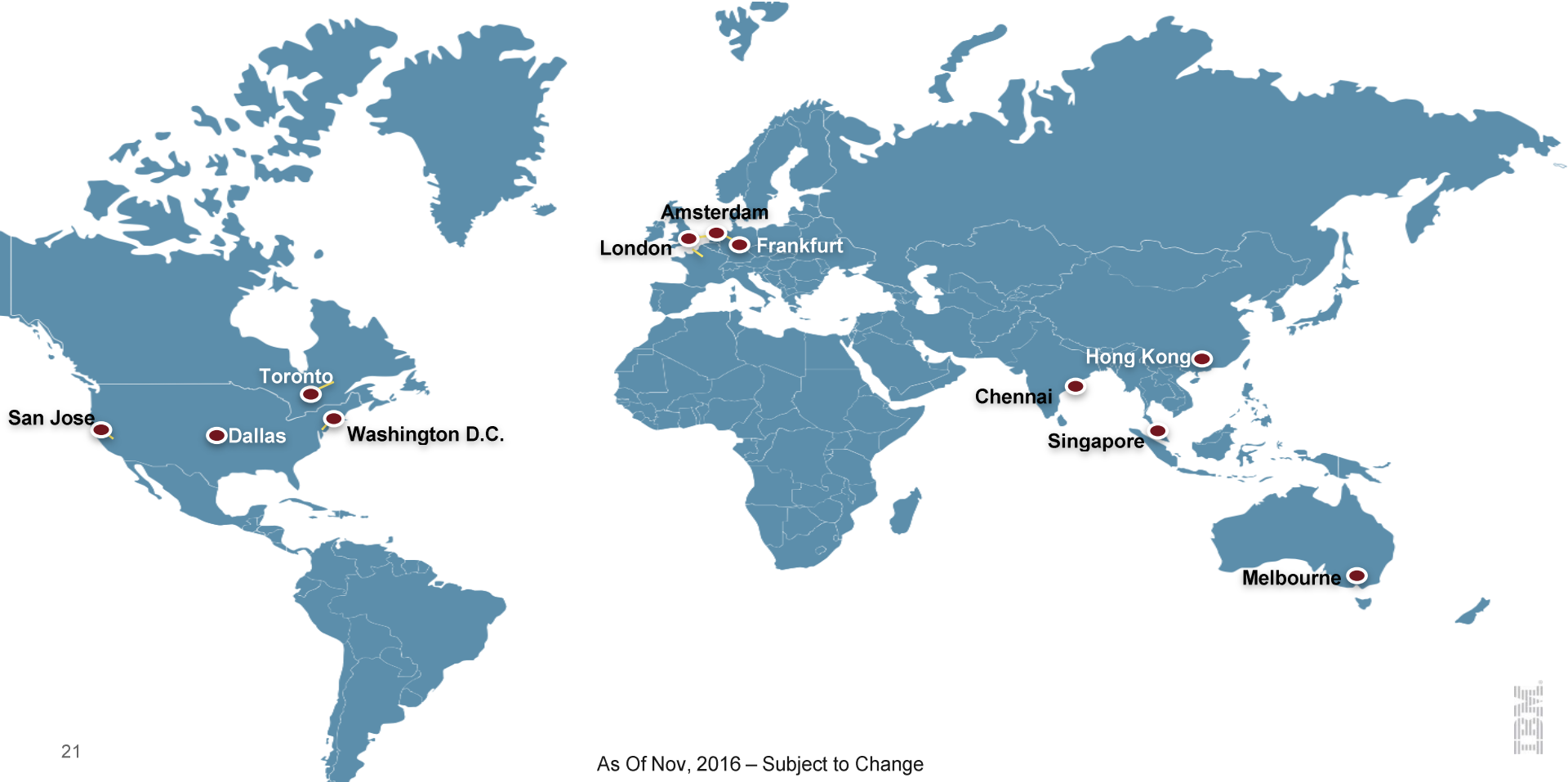

As Of Nov, 2016 – Subject to Change

Summary of the IDAA on Cloud Product Feature

- Improved SQL compatibility and performance (watch this space)
- Simplified software installation and upgrade
- Modernized SQL engine
- Compatible to existing IDAA installations (co-existence)
- Cloud-first delivery

This is a journey, we need your feedback.
Please help us to shape this product

Find me on social media

- https://idaadev.wordpress.com/

- https://www.ibm.com/developerworks/community/groups/service/html/communityview?communityUuid=42acc52f-ec39-4667-867e-9404d4f53bd0

- https://www.linkedin.com/in/daniel-martin-4a3a0998

Notices and disclaimers

Copyright © 2016 by International Business Machines Corporation (IBM). No part of this document may be reproduced or transmitted in any form without written permission from IBM.

U.S. Government Users Restricted Rights - Use, duplication or disclosure restricted by GSA ADP Schedule Contract with IBM.

Information in these presentations (including information relating to products that have not yet been announced by IBM) has been reviewed for accuracy as of the date of initial publication and could include unintentional technical or typographical errors. IBM shall have no responsibility to update this information. THIS DOCUMENT IS DISTRIBUTED "AS IS" WITHOUT ANY WARRANTY, EITHER EXPRESS OR IMPLIED. IN NO EVENT SHALL IBM BE LIABLE FOR ANY DAMAGE ARISING FROM THE USE OF THIS INFORMATION, INCLUDING BUT NOT LIMITED TO, LOSS OF DATA, BUSINESS INTERRUPTION, LOSS OF PROFIT OR LOSS OF OPPORTUNITY. IBM products and services are warranted according to the terms and conditions of the agreements under which they are provided.

IBM products are manufactured from new parts or new and used parts. In some cases, a product may not be new and may have been previously installed. Regardless, our warranty terms apply."

Any statements regarding IBM's future direction, intent or product plans are subject to change or withdrawal without notice.

Performance data contained herein was generally obtained in a controlled, isolated environments. Customer examples are presented as illustrations of how those customers have used IBM products and the results they may have achieved. Actual performance, cost, savings or other results in other operating environments may vary.

References in this document to IBM products, programs, or services does not imply that IBM intends to make such products, programs or services available in all countries in which IBM operates or does business.

Workshops, sessions and associated materials may have been prepared by independent session speakers, and do not necessarily reflect the views of IBM. All materials and discussions are provided for informational purposes only, and are neither intended to, nor shall constitute legal or other guidance or advice to any individual participant or their specific situation.

It is the customer's responsibility to insure its own compliance with legal requirements and to obtain advice of competent legal counsel as to the identification and interpretation of any relevant laws and regulatory requirements that may affect the customer's business and any actions the customer may need to take to comply with such laws. IBM does not provide legal advice or represent or warrant that its services or products will ensure that the customer is in compliance with any law.

Notices and disclaimers continued

Information concerning non-IBM products was obtained from the suppliers of those products, their published announcements or other publicly available sources. IBM has not tested those products in connection with this publication and cannot confirm the accuracy of performance, compatibility or any other claims related to non-IBM products. Questions on the capabilities of non-IBM products should be addressed to the suppliers of those products. IBM does not warrant the quality of any third-party products, or the ability of any such third-party products to interoperate with IBM's products. IBM EXPRESSLY DISCLAIMS ALL WARRANTIES, EXPRESSED OR IMPLIED, INCLUDING BUT NOT LIMITED TO, THE IMPLIED WARRANTIES OF MERCHANTABILITY AND FITNESS FOR A PARTICULAR PURPOSE.

The provision of the information contained herein is not intended to, and does not, grant any right or license under any IBM patents, copyrights, trademarks or other intellectual property right.

IBM, the IBM logo, ibm.com, Aspera®, Bluemix, Blueworks Live, CICS, Clearcase, Cognos®, DOORS®, Emptoris®, Enterprise Document Management System™, FASP®, FileNet®, Global Business Services ®, Global Technology Services ®, IBM ExperienceOne™, IBM SmartCloud®, IBM Social Business®, Information on Demand, ILOG, Maximo®, MQIntegrator®, MQSeries®, Netcool®, OMEGAMON, OpenPower, PureAnalytics™, PureApplication®, pureCluster™, PureCoverage®, PureData®, PureExperience®, PureFlex®, pureQuery®, pureScale®, PureSystems®, QRadar®, Rational®, Rhapsody®, Smarter Commerce®, SoDA, SPSS, Sterling Commerce®, StoredIQ, Tealeaf®, Tivoli®, Trusteer®, Unica®, urban{code}®, Watson, WebSphere®, Worklight®, X-Force® and System z® Z/OS, are trademarks of International Business Machines Corporation, registered in many jurisdictions worldwide. Other product and service names might be trademarks of IBM or other companies. A current list of IBM trademarks is available on the Web at "Copyright and trademark information" at: www.ibm.com/legal/copytrade.shtml.

Thank You

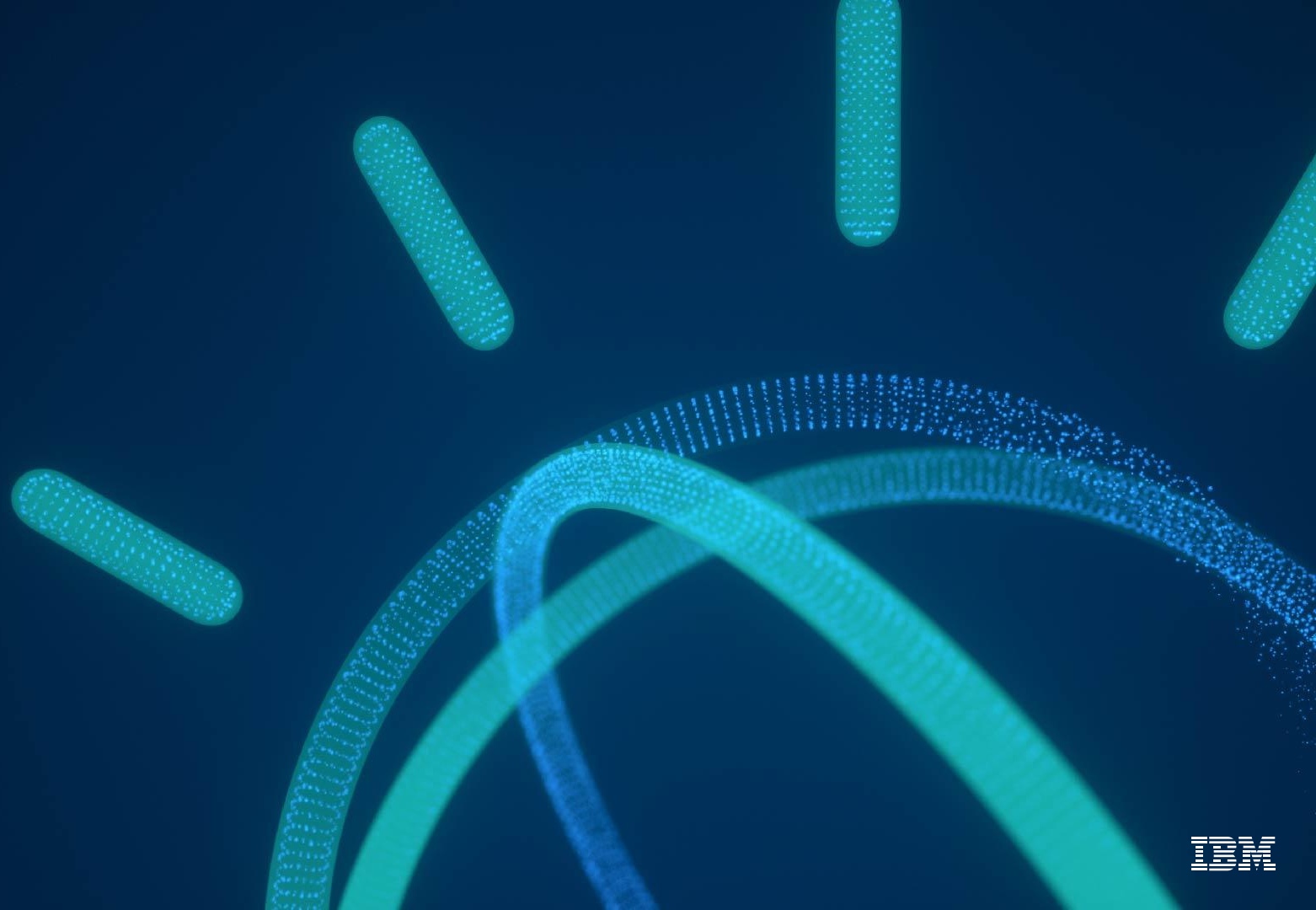

World of
Watson
2016

IBM

BACKUP